Circuit Diagram:

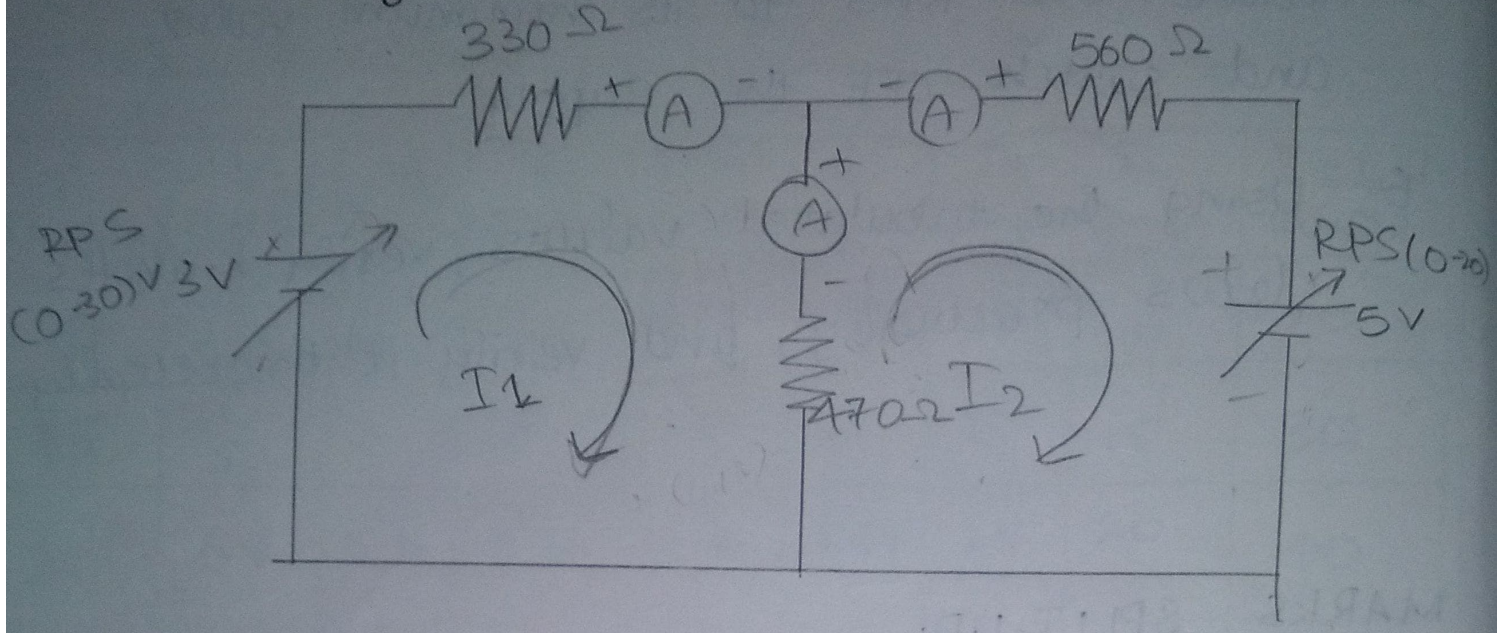

TABULAR COLUMN:

PARAMETER	THEORITICAL	PRACTICAL
I_1	1.2	1.3
I_2	4.2	4.3
$I_3(I_2+I_1)$	5.4	5.4

all verified

EXP. NO. : 2	DETERMINATION OF CURRENT IN CIRCUIT USING MESH ANALYSIS
Date : 4.02.2026	

AIM: To determine the current in circuit using mesh analysis both theoretically and practically for a given DC circuit

APPARATUS REQUIRED:

SL. NO	APPARATUS	SPECIFICATION	QUANTITY
1	Regulated Power Supply (RPS)	(0-30V)	1
2	Ammeter	(0-10mA) MC	3
3	Voltmeter	(0-30 V) MC	3
4	Resistors	330Ω, 470Ω, 560Ω	Each 1
5	Bread Board	-	1

Calculations:

$$\begin{bmatrix} 800 & -470 \\ -470 & 1030 \end{bmatrix} \begin{bmatrix} I_1 \\ I_2 \end{bmatrix} = \begin{bmatrix} 3 \\ -5 \end{bmatrix}$$

$$\Delta = \begin{bmatrix} 800 & -470 \\ -470 & 1030 \end{bmatrix} = 603100$$

$$\Delta_1 = \begin{bmatrix} 3 & -470 \\ -5 & 1030 \end{bmatrix} = 470$$

$$\Delta_2 = \begin{bmatrix} 800 & -470 \\ -470 & 1030 \end{bmatrix} = -2590$$

$$I_1 = \frac{\Delta_1}{\Delta_2} = 0.0012\,A = 1.2\,mA$$

$$I_2 = \frac{\Delta_2}{\Delta} = -0.0042\,A = -4.2\,mA$$

$$I_3 = I_1 + I_2 = 5.4\,mA$$

Procedure:

1. Give connections as per the circuit diagram
2. Switch ON the supply, vary the RPS and set a particular input voltage
3. Note down the readings of ammeters and voltmeters and tabulate them
4. Vary the RPS for different input voltages and note down the readings of all the meters
5. Reduce the RPS to its minimum value and switch OFF the supply
6. Using the tabulated values, verify Kirchoff's laws practically, and verify it theoretically

MARKS SPLIT UP:

SI. NO.	DESCRIPTION	MARK ALLOTED	MARK OBTAINED
1	Experimental Setup/ connections	20	20
2	Observation/ Readings	20	20
3	Calculations/ Results	20	20
4	Viva	20	20
5	Record	20	20
		Total	100

(10)

4/2/26

Result:

Thus, the mesh analysis is verified practically and theoretically. The resultant currents for / V supply are: a) The current across 330Ω is 1.2mA

b) The current across 560Ω is -4.2mA

c) The current across 470Ω is 5.4mA